Ballistic Chronograph

The device is designed to measure the speed and kinetic energy ammunition of air guns.

Features:

- range of mesurement : 4 – <=500 m/s
- current consumption: 100mA (with LCD backlight)
- power supply: 2x AA alkaline battery or AC/DC converter ~230V/ 7-12V
- dimensions 139x71x100
- weight 600 g

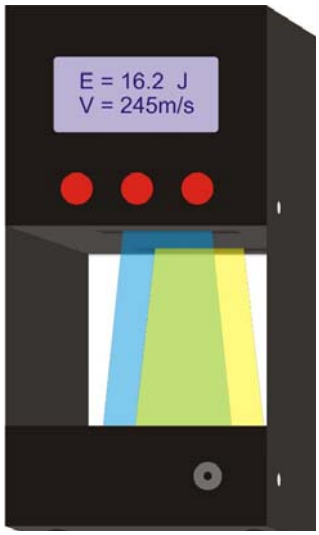

Measurement function:

- velocity V [m/s]
- kinetic energy E [J]
- shooting counter : 999
- average kinetic energy Esr [J]
- average velocity Vsr [m/s]
- minimum velocity Vmin [m/s]
- maximum velocity Vmax [m/s]
- absolute velocity dVsr=|Vmax-Vmin|
- standard deviation SV [m/s]
- velocity feet per second V[fps]
- rate of fire RoF (rate of fire)

Other function:

- setting weight of pellets 0.01 - 25.00g
- callibration
- memory 250 measurement of value
- transmision via RS232 or USB-COM cable to computer

Setting weight of pellet:

In mode **E[J]** and **V[m/s]** press S1 (first on the left).
Use the button S2 (decrease) and S3 (increase). Hold pressed S2 or S3 by a longer time, it will cause fast changes of value.

Measurement:

Place a barrel in perpendicular to the front of the measurement the window and make a shot. If the velocity is less tham 4 m/s or the second sensor will not detect a pelet, then the LCD will display a massage: „range".

Pressing **S2** in sequence will display **Measurement function**.

Pressing **S3** by a short time (third button on the left) will cause return to main menu.
Pressing **S3** by a long time (over 1 sec.) will erase measured results.

Memory of measured results

The Chrono can to registered 250 measure of velocities. For Access to the register to use **S2** and **S3** the buttons. When the register is overload, it will overwrite existing results.

EEPROM Memory

The register with measured velocities, which can be stored in EEPROM memory and restored after the later time. Subsequent measurements are then stored in the cell-free registry. Counter shots starts from the beginning

Each new record for eeprom overwrites the previously stored data.
In order to preserve the olds results stored in the EEPROM, you need run "read from memory" operation and start a new measurement.

Connecting to computer

Communication with PC is possible using USB-COM or RS232 cable. Transmission speed is 19200 bps. Data sent after each shot, and while reading the EEPROM memory. The read data can be used Hyper Terminal from Windows.

With Hyper Terminal measurements can be copied to a text file or Excel.

Hyper Terminal

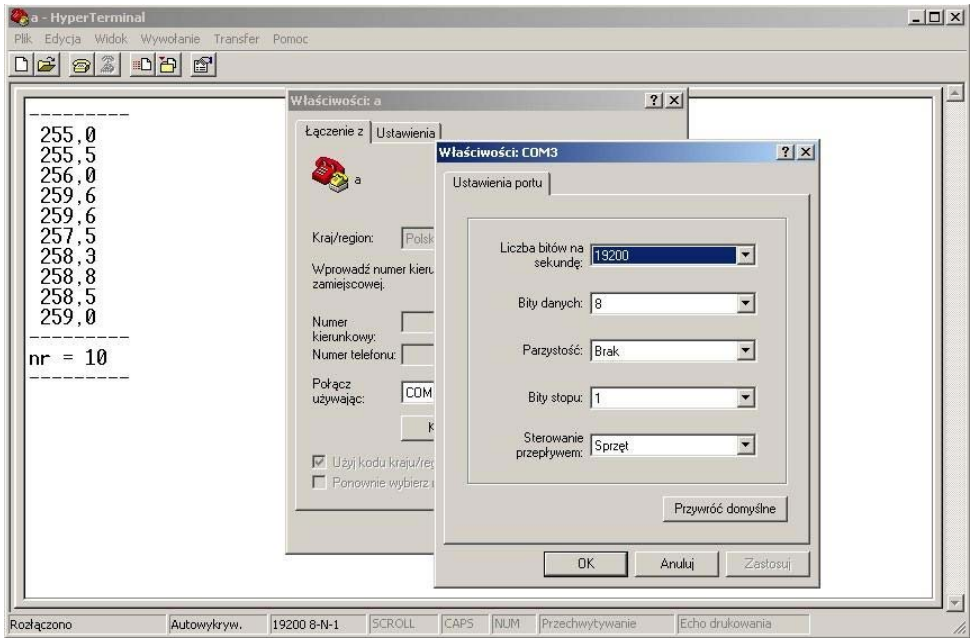

Flow control – you need choose: without flow control or devices

Configured connection in Hyper Terminal can be saved as a session file: File -> Save As.
After starting the session file is run Hyper Terminal with new seting.

Calibration:

Press **S3** and turn on the power supply – after time 1 second is displayed <gate>
and thye distance between optic sensors. If you change the distance value – it will change measured velocity.

V=distance between gate / measured time

At V=100m/s if the „distance between gate" increased about 0.1mm - the velocity will increase about 0.2m/s and similarly: 0.4m/s @ 200m/s, 1m/s @ 500m/s and so on.

The **S2** and **S3** buttons allow you to change the distance parameter. Pressing S1 will record and return to the measurement mode. Measure the distance between the gates on the rail can be made by using the ruler. Lz and Lw are distances between the two sensors. Denoting Lz as the distance to the outside, Lw - the distance on the inside:

$$L=(Lz+Lw)/2$$

The calibration can also be performed by the comparative method, which involves comparing the velocity of the others using a standard device.
With this method, you must calculate the parameter L - distance between gates.

$$L= Lk * Vw / Vk$$

L [cm] - calculated distance between gates
Lk [cm] - the distance between gates your chronograph
Vk [m / s] - the speed measured by your chronograph
Vw [m / s] - velocity measured by the second precise chronograph

Measurement rate of (RoF – rate of fire)

RoF is displayed as the number of shots fired per second (RPS) or minute (RPM). The lower limit of the measurement is: 3.5 RPM.

Mathematical formula (N - number of shots, ti - measured by time):

$$RPS = \frac{N-1}{\sum_{i=1}^{N} t_i}$$

$$RPM = 60 \times RPS$$

Set the measurement mode RoF

Turn on the powe supply and using **S2** button select mode RoF.

Measurement

Please make a few shots. Pellet must pass through the first optical gate.
The display shows the results: the number of shots per second (RPS), the number of rounds per minute (RPM) and the number of shot. Switching between RPS and the RPM is done by pressing **S1**.

The measurement is initiated by the first shot. The result is displayed after the second shot.

Measuring cycle time is:

$$t1 + t2 + t3 + ... + tn + 16 \text{ seconds}$$

where "n" number of shots "t" the duration of each shot

After the n-th shot devices is still in an activity measurement for 16 seconds.
After this time, the display is symbol *.
The symbol indicates the end of the measurement cycle.
A new measuring cycle begins next shot.

Clearing measurement:

Press **S2** or **S3**. **S3** button to exit the measurement mode RoF and deletes the RPS, RPM and counter shots.

Measurement of rate of fire can not be performed simultaneously with the measurement of speed.

Turn on / off the display backlight

Press S1 and power. Lighting is switched on / off.

Measurement volta te of optical sensors

Press **S2** and turn on the power supply. The Voltage will be displayed.
This feature is advantageous in the diagnosis of defective sensors. When obscured optical gates, the voltage rises to 4.99V. When exposed is: 4.0 - 4.7V.

Low battery indication – programming (do not test – function for service)

Remove batteries and connect instead batery to metall holder on PCB, the adjustable AC/DC converter, then set 2V on AC/DC. Press the S1 and S3 and switch on on the power supply from external AC/DC converter. When you see the "bat" message, in a short time, press S2 (the S1 and S3 must be hold). If you see the symbol "*" means that the programmed threshold for the discharge of the battery has been done.
Initially pre-programmed alarm threshold is about 2V.

Operation notes

- Protect against a moisture and dust.
- Make sure that batteries are place in holder in a right position. Otherwise batteries will be discharged via a thermal fuse.

  Correct position:

- To power supply from an external source use: ~230V / 7-12V AC/DC adaptor with plug 5.5mm diameter and hole 2.1mm. The pin of plug has "+" polarity.

Functions

Measurement mode:
1, 3, 4, 6, 7, 8, 11,12, 13, 14, 15, 16

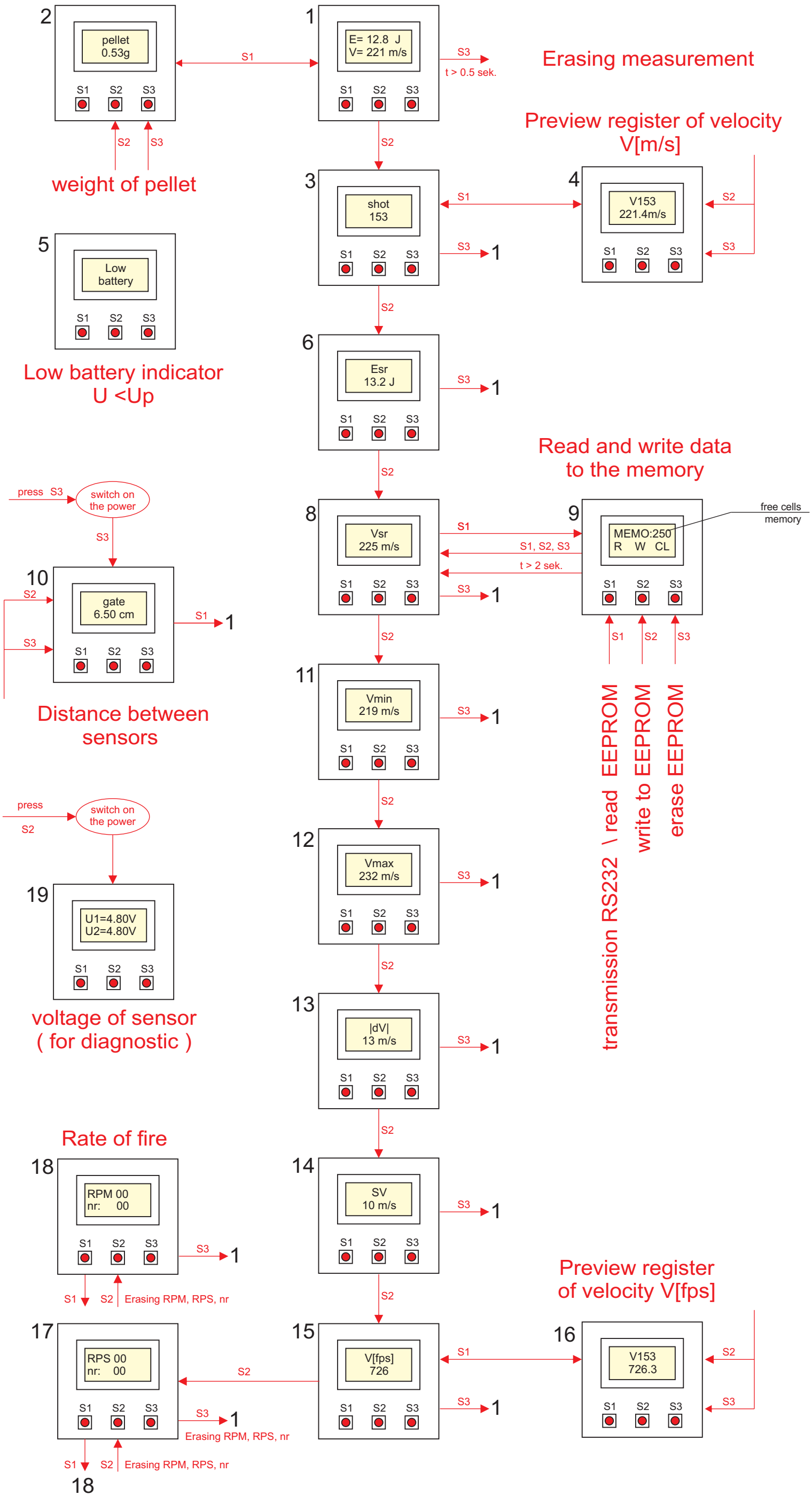

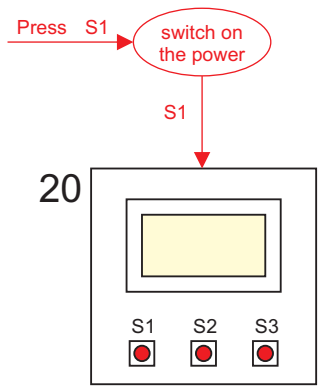

Backlight on / off

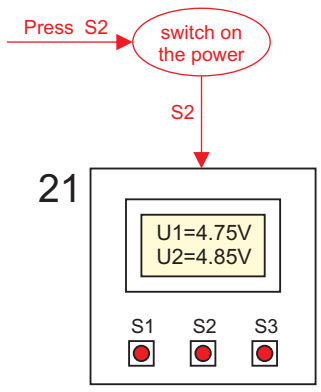

Measuring Voltage of sensors

Function for service

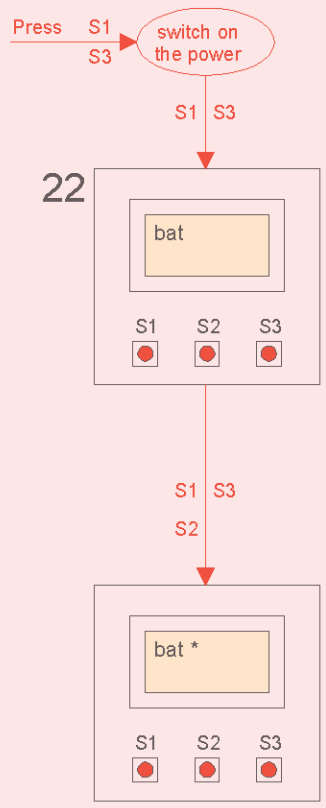

Low battery detector programming